VDK/TLM Creation

Rapid Training

Training Programmable Interval Timer Model Specification

© 2018 Synopsys, Inc.

Table of Contents

Training Example Specification: Programmable Interval Timer (PIT) Model **2**
Base Functionality 2
Structure of the PIT Model **3**

Training Example Specification: Programmable Interval Timer (PIT) Model

The example/training interval timer is a simple version of a programmable interval timer, based on an existing (3rd party) HW specification. A detailed specification can be found in MMC2001RM.pdf, MMC2001 Reference Manual Revision 1.1, Chapter 9.6. The specification is included in the training labs.

Base Functionality

The interval timer (PIT) is a 16-bit "set-and-forget" timer that provides precise interrupts at regular intervals with minimal processor intervention. The timer can either count down from the value written in the modulus latch, or it can be a free- running down counter.

The timer model has the ports, register interface and behavior as shown in the following illustration.

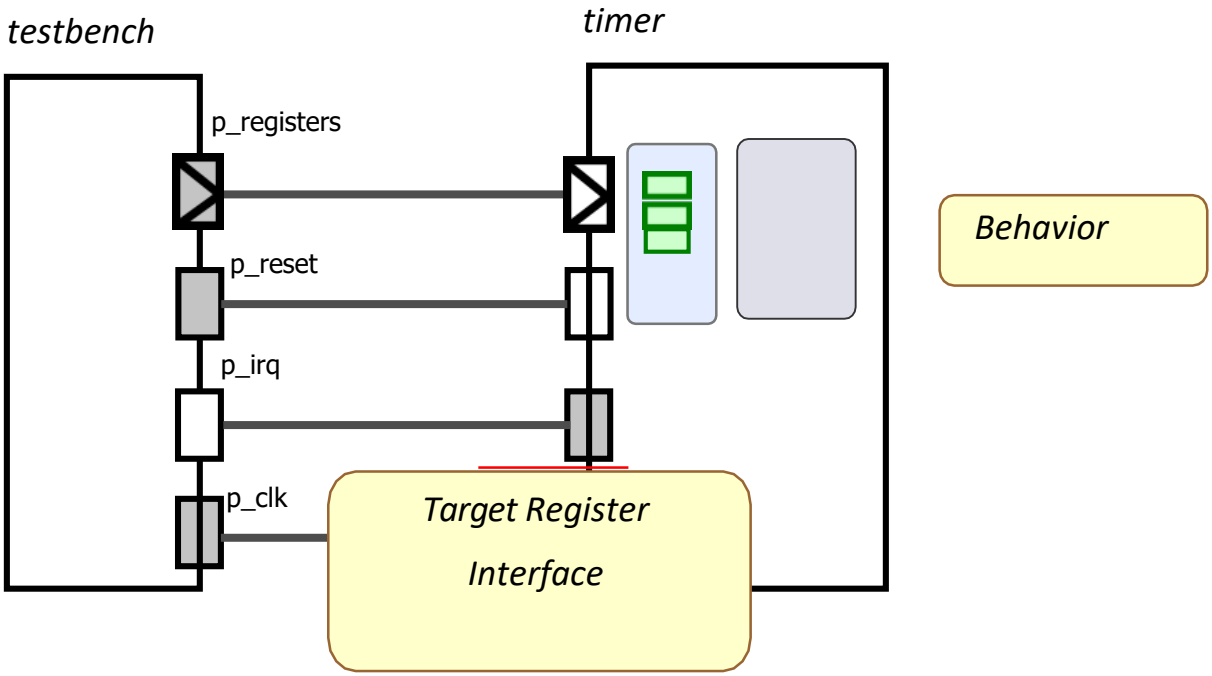

You can control the timer component by programming the control/status register (ITCSR) and data register (ITDR). The PIT can be written at any time. The value written to the ITDR determines the modulus of the timer, i.e. what value is used as starting point for the internal counter. Data read from the ITDR is the present value of the modulus latch. The present counter value is read by reading the PIT alternate data register (ITADR). After the counter reaches a count of zero, the PIT interrupt flag (ITIF) is set in the ITCSR register. If the PIT interrupt enable (ITIE) bit is set in the ITCSR, the interrupt signal can issue an interrupt to the CPU.

.

Structure of the PIT Model
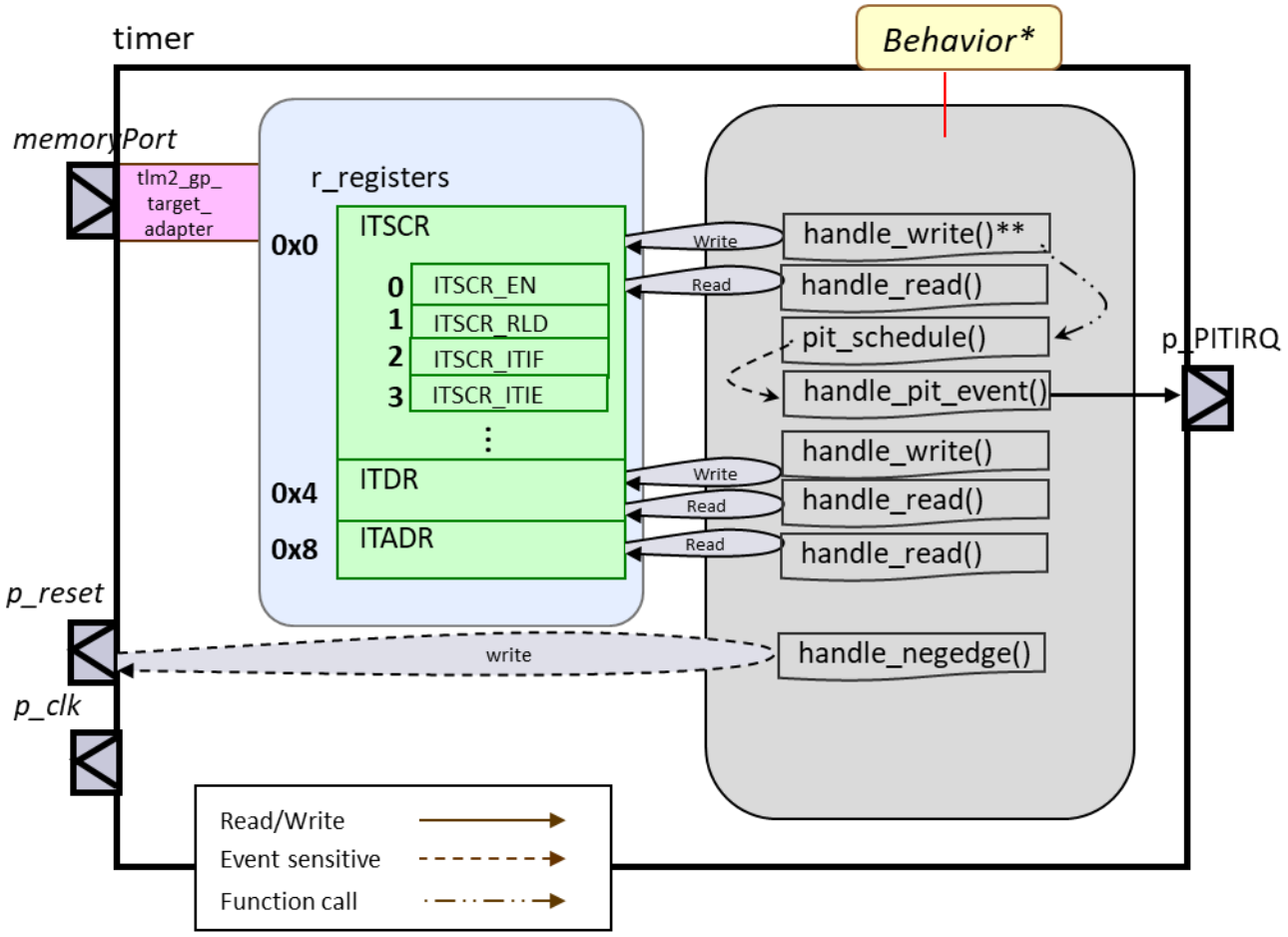
The principle structure of the PIT model is depicted in the following, though this is showing a slightly different model: